TYK+ 30

Performance Lighting





Long-lasting energy-efficient flood and accent light series for lighting landscapes, trees, columns, monuments, and architectural details.

- Multi-step powder-coat painting process, optimized against UV rays and corrosion.
- Copper-free precision die-cast aluminum housing, and adjustable stainless steel mounting bracket.
- Stainless steel graduated ferrules for aiming purposes on both sides of the fixture.
- Extra-clear, tempered, silk-screened, flat glass diffuser.
- Custom molded, anti-aging gasket(s).
- Stainless steel external hardware.
- Custom MCPCB utilized to maximize heat dissipation and promote long LED life.
- NEMA 2H X 2V light distribution (C/I)
- NEMA 4H X 4V light distribution (C/M)
- NEMA 5H X 5V light distribution (C/IW)
- NEMA 5H X 5V light distribution (ELL).
- High-transmittance transparent optics.
- Input voltage: 120-277 V (50 / 60 Hz), integral 0-10 V dimming driver.
- Standard tear-proof nickelled brass cable gland M20x1.5 for cables Ø0,4" - Ø0,55".
- Consult factory for dimming options, marine-grade, custom finishes (please specify RAL color), and non-cataloged CCT (Kelvin) options including static colors.
- Consult factory for additional optic options.
- 5-year warranty.
- Marine Grade finish.
- Suitable for Natatorium applications.

IP 66 · WET · c UL us LISTED · 0-10 V · RAL · IK 09 10 J · FULL CUT OFF

FINISHES

- **AN-96** / Iron gray / Textured
- **BK-81** / Black / Textured
- **GR-94** / Aluminum metallic / Textured
- **WH-87** / White / Textured
- **RB-10** / Iron rust / Textured

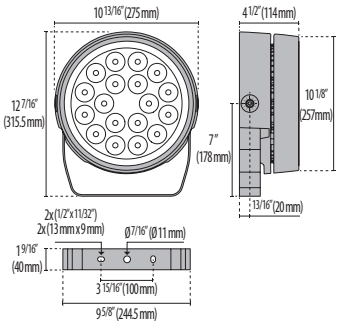

TYK+ 30

Lumen Output	3K	4K
TYK+30 C/I 60W	5135	5543
TYK+30 C/I 85W	6547	7067
TYK+30 C/W 60W	5575	6019
TYK+30 C/W 85W	7109	7674
TYK+30 C/M 60W	5739	6195
TVR+30 C/M 85W	7318	7899
TVR+30 35×65 60W	3487	3764
TVR+30 35×65 85W	4446	4779

Scan here for Installation Instructions

Performance in Lighting reserves the rights to make all necessary changes without prior notice.

Performance in Lighting - 2621 Keys Pointe - Conyers, Georgia 30013 - USA - voice 770.822.2115 - info.usa@pil.lighting
www.performanceinlighting.com

Rev. 08/25/2026

Order Guide - TYK+ 30

Performance Lighting

Order code example **TYK+30-20W-3K-C/I-AM-UNV-010V-AGS**

Series	Wattage	CCT	Distribution	Finish	Voltage	Dimming	Options/ Accessories
TYK+30 TYK+30	**60W** 60 Watt **85W** 85 Watt **XX** Specific wattage must be below max	80 CRI std. **27K** 2700K **3K** 3000K **35K** 3500K **4K** 4000K **6K*** 6000K ** Consult factory for MOQ*	**C/I** 10º Beam **C/IW** 65º Beam **C/M** 34º Beam **ELL** 35º x 65º	**AM** Aluminum Metallic **IG** Iron Gray **IR** Iron Rust **WH** Textured White **BK** Textured Black **CC** Custom Color	**UNV** 120-277V	Blank Non-Dimming **010V** 0-10V Dimming (Remote Driver Only	**AGS** Anti-Glare snoot **ERB** Extra rotation bracket **JBOX** Jbox cover plate **BD** Barn door kit (Not suitable with Snoot) **2AB** Two axis rotation bracket for gliding support **GC** Gliding support (3 9/16* poles) **P8** 8' pole Ø 3.5" **P10** 10' pole Ø 3.5" **P12** 12' pole Ø 3.5" **P14** 14' pole Ø 3.5" **P16** 16' pole Ø 3.5" **PXX** Specify pole height **XX'Cable** Specify length of factory installed cable 3' standard **LVR** Hex Louver

CONSULT FACTORY FOR OTHER AVAILABLE OPTIONS NOT SHOWN ABOVE

Performance in Lighting reserves the rights to make all necessary changes without prior notice.
Performance in Lighting - 2621 Keys Pointe - Conyers, Georgia 30013 - USA - voice 770.822.2115 - info.usa@pil.lighting
www.performanceinlighting.com

Rev. 08/25/2026

OPTIONAL ACCESSORIES

DESCRIPTION	FINISH	PART NUMBER
Optical accessories		
Anti-glare snoot	●	3107469
External Hex Louver	●	1394-30
Wall mount		
JBox cover plate - Iron gray	●	07959
Surface mount		
Extra rotation bracket +55°/-90°	●	3108558
Pole mount		
Two-axis rotation bracket for gliding support	●	3107473
Gliding support made of painted aluminium for the installation on Ø 3 9/16" / Ø 90 mm posts	●	14099696
Pole 8' Ø 3.5"	●	71408353
Pole 10' Ø 3.5"	●	71410353
Pole 12' Ø 3.5"	●	71412353
Pole 14' Ø 3.5"	●	71414353
Pole 16' Ø 3.5"	●	71416353



3107469



07959



3108558



3107473



14099696

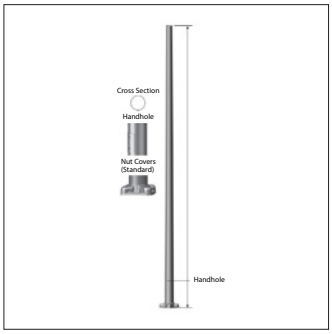

71408353
71410353
71412353
71414353
71416353



LVR
Hex cell louver

Order Guide - Poles for TYK+

Performance Lighting

Order code example	714-20-35-3

Note: When ordering, please specify quantity of fixture per pole as well as installation location (city & state)

Material	Height (ft)	Pole Diameter (in)	Custom Options (*Blank is Standard*)	Finish (additional characters may follow for factory information)
714 Aluminum* **715** Steel* **716** Wood* ***Based on EPA and wind loads, pole may need to be tapered or require a tenon.**	**08** 8' tall **10** 10' tall **12** 12' tall **14** 14' tall **20** 20' tall **40** 40' tall Custom heights available, contact factory for details	**35** Ø3.5"	**DBx** Direct Burial** (x = depth below grade, measured in feet) **GFCI** integrated GFCI outlet** **BA** Banner Arms** (contact factory for details) **some options not available with wood poles – contact factory for details.	**1** Aluminum Metallic **2** Black **3** Iron Gray **4** Iron Rust **5** White **6** Custom Color (specify RAL#) **W1** Wood – Caramel – smooth **W12** Wood – Vanilla - brushed *For more, see below*

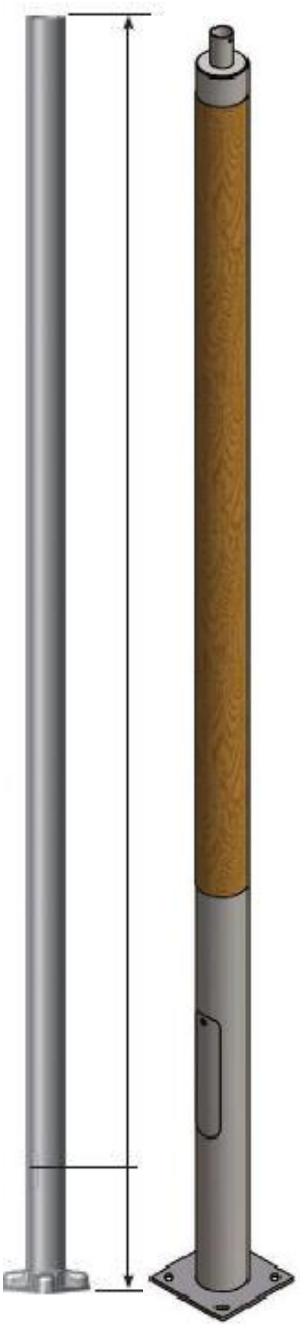

Note: When ordering, please specify quantity of fixture per pole as well as installation location (city & state)

WOOD GRAIN FINISH OPTIONS:



Note: Base cover shape and bolt circle diameter (BCD) will vary based on pole size and vendor. Contact factory for details related to your project.

Performance in Lighting - 2621 Keys Pointe - Conyers, Georgia 30013 - USA - voice 770.822.2115 - info.usa@pil.lighting
www.performanceinlighting.com